THIS DRAWING AND SPECIFICATIONS ARE THE PROPERTY OF THE PERFORMANCE WINDOW GROUP. THEY ARE ISSUED IN STRICT CONFIDENCE AND SHALL NOT BE REPRODUCED, COPIED OR USED AS THE BASIS FOR MANUFACTURING WITHOUT WRITTEN PERMISSION.

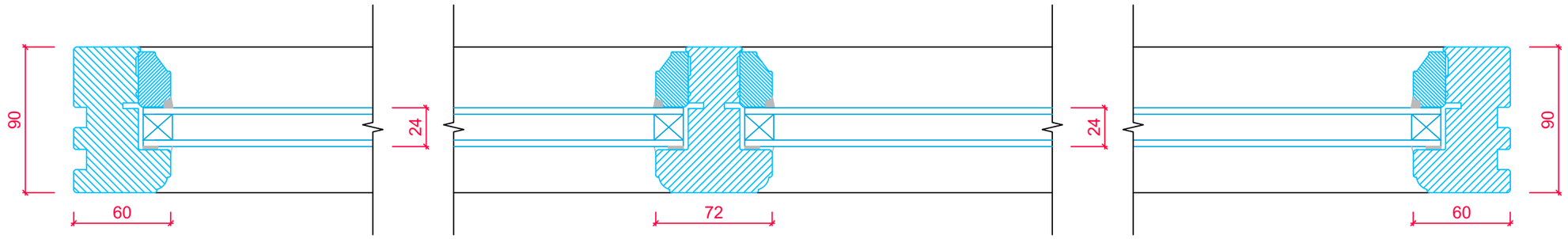

FRAME CROSS SECTION 'A-A'

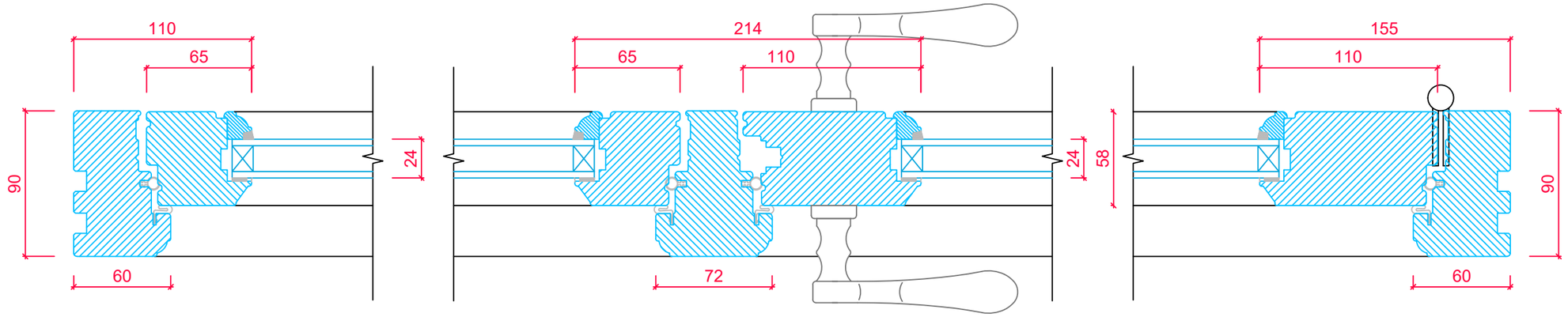

FRAME CROSS SECTION 'B-B'

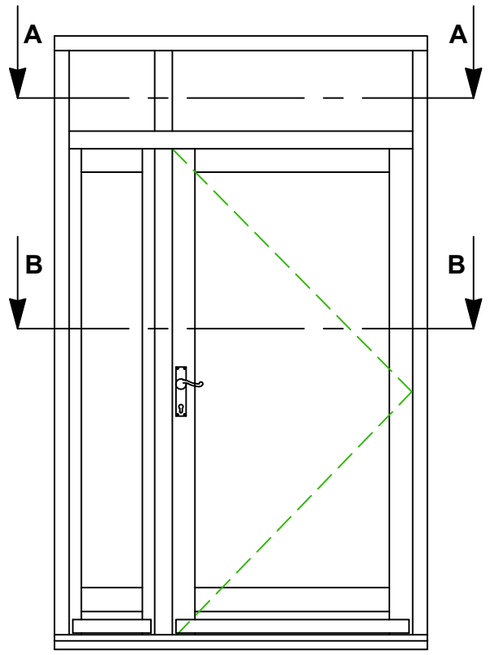

TYPICAL FRAME LAYOUT WITH GLAZED SIDELIGHT AND DIRECT GLAZED TOPLIGHT

TIMBER WINDOWS EST. 2004

TOLERANCES
UNLESS OTHERWISE SPECIFIED

ALL DIMENSIONS IN MM
ALL LINEAR DIMENSIONS ±0.4
ALL ANGLE DIMENSIONS ±0.5°
BREAK ALL SHARP EDGES 0.5

PRODUCT RANGE:
ENTRANCE DOOR - OPEN IN (Ovolo)
24mm Unit

TITLE
HORIZONTAL SECTION DETAIL
- WITH SIDELIGHT AND DIRECT GLAZED TOPLIGHT

Rev B

DRAWN BY:	LH	DATE DRAWN:	01/03/2017	SCALE:	1:3, 1:25

ALL MEASUREMENTS ARE FINISHED DIMENSIONS IN MM.

DO NOT SCALE DRAWING!

Din A3